THIS DRAWING IS FOR REFERENCE ONLY.

THE ODEC-PMA AND ODEC-HDWM ARE DISCONTINUED AND NO LONGER AVAILABLE.

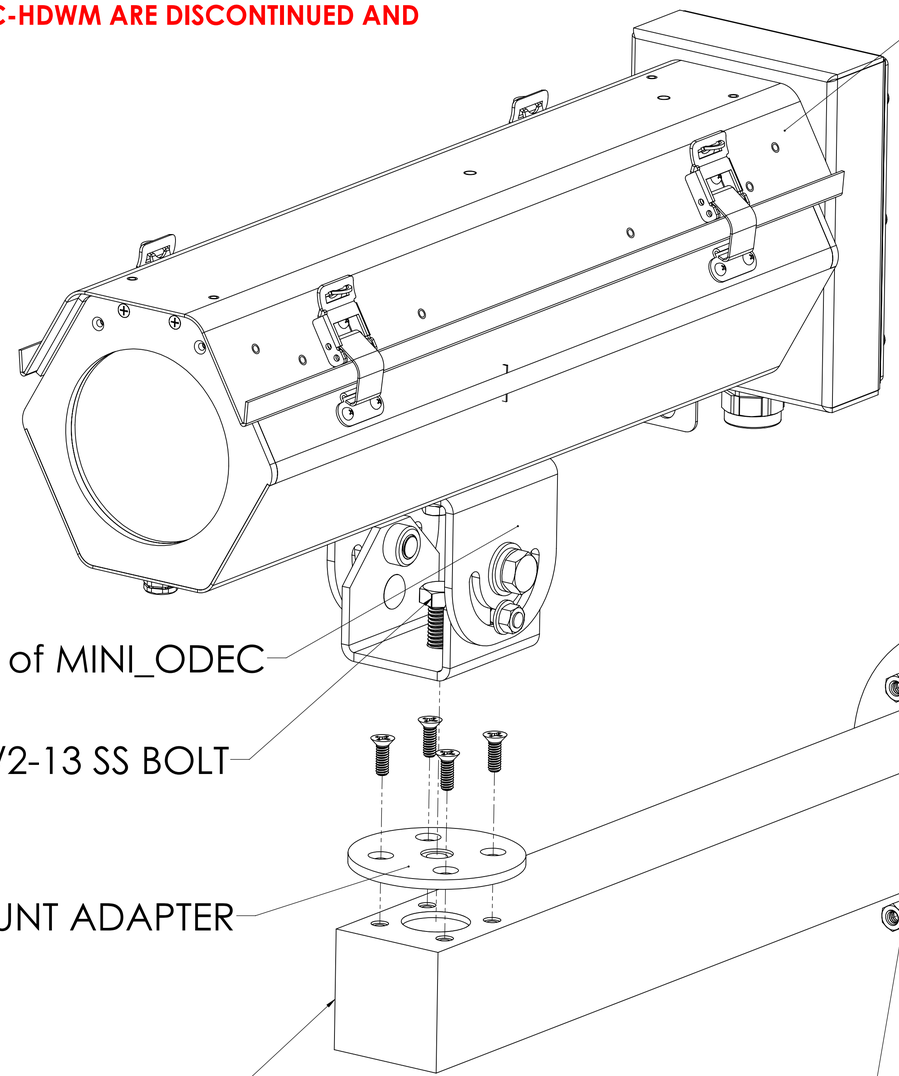

UNLESS OTHERWISE SPECIFIED:		NAME	DATE	ALTMAN Lighting, Inc. ALTMAN STAGE LIGHTING
DIMENSIONS ARE IN INCHES TOLERANCES: FRACTIONAL ± 1/16 ANGULAR: MACH ±1° BEND ±1° TWO PLACE DECIMAL ±0.030 THREE PLACE DECIMAL ±0.010 FINISH 125	DRAWN	RAM	5/28/14	TITLE:
	CHECKED	JTR	5/28/14	
	ENG APPR.	JTR	5/28/14	
	MFG APPR.	-	-	
	Q.A.	-	-	
INTERPRET GEOMETRIC TOLERANCING PER: ASME Y14.5	COMMENTS: -			SIZE B DWG. NO. ASSEMBLY REV 00
MATERIAL				
THIRD ANGLE PROJECTION	SIMILAR TO: -			SCALE: 1:1.5 (DO NOT SCALE DRAWING) WEIGHT: N/A SHEET 1 OF 1

PROPRIETARY AND CONFIDENTIAL THE INFORMATION CONTAINED IN THIS DRAWING IS THE SOLE PROPERTY OF ALTMAN STAGE LIGHTING. ANY REPRODUCTION IN PART OR AS A WHOLE WITHOUT THE WRITTEN PERMISSION OF ALTMAN STAGE LIGHTING IS PROHIBITED.

D wall mount assembly 00